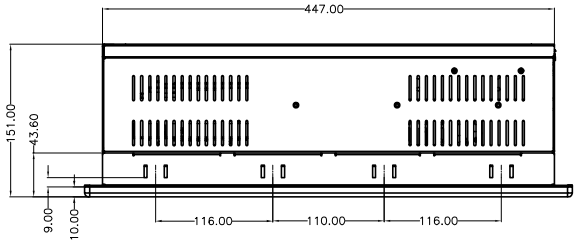

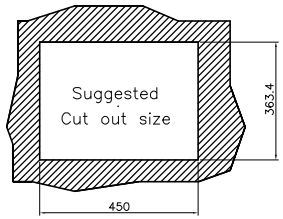

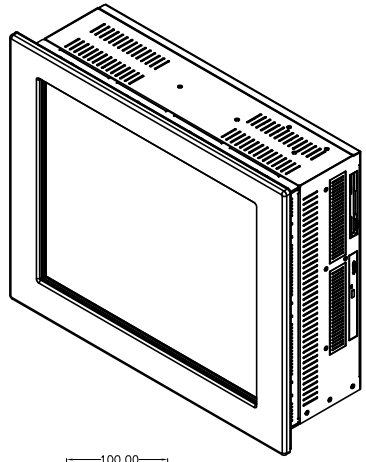

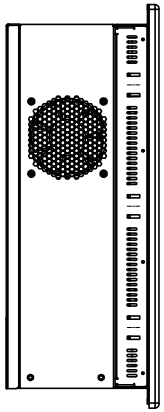

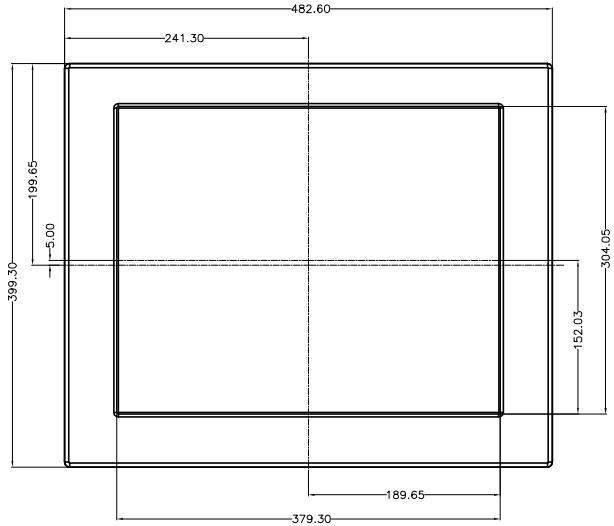

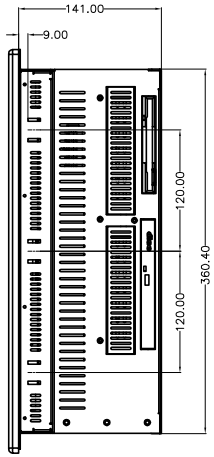

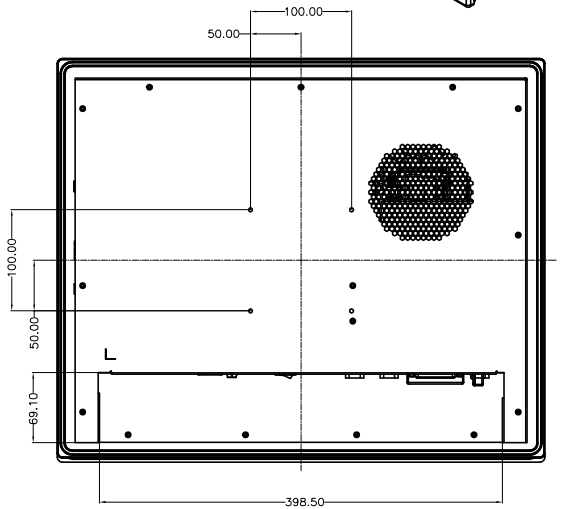

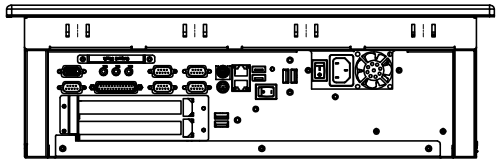

REV	DESCRIPTION	SIGN	DATE
5			
4			
3			
2			
1			

Note:
The componet should be comply with the prohibit of hazardous substances in the RoHs Directive.

RANGE (mm)	Common Tolerance
0~25	± 0.10
25~80	± 0.15
80~200	± 0.20
200~400	± 0.30
400~	± 0.40
ANGLE	± 1°

APPROV	HENRY	2006.09.28
CHECK	DAISY	2006.09.28
DESIGN	OLIVER	2006.09.28
DRAWN	OLIVER	2006.09.28
UNIT:mm	SCALE:1:1	
	SIZE: A0	
FILE NO:		

ICP Electronics Inc.

TITLE: PPC-5290G Assembly

MODEL: PPC-5290G

PART NO: